Electrolux PROFESSIONAL

Modular Cooking Range Line 700XP Two Wells Electric Fryer Top 7 liter

ITEM #

MODEL #

NAME #

SIS #

AIA #



371076 (E7FREH2B00) 7+7-lt electric Fryer Top with 2 "V" shape wells (external heating elements), 2 baskets and lids included

Short Form Specification

Item No.

To be installed on open base installations, bridging supports or cantilever systems. High efficiency infrared heating elements (10.8kW) attached to the outside of the wells. Deep drawn V-shaped well. Oil drains through a tap on the front. Exterior panels in stainless steel with Scotch Brite finish. One piece pressed work top in 1.5 mm thick stainless steel. Right-angled side edges to allow flush-fitting junction between units.

APPROVAL:

Main Features

- Unit to be mounted on open base cupboards, bridging supports or cantilever systems.
- Deep drawn V-Shaped wells.
- High efficiency infrared heating elements are attached to the outside of the wells.
- Thermostatic regulation of oil temperature up to a maximum of 185 °C.
- Overheat protection thermostat as standard on all units.
- Oil drains through a tap positioned on the front the wells.
- All major compartments located in front of unit for ease of maintenance.
- IPx4 water protection.
- Optional portable oil quality monitoring tool (code 9B8081) for efficient oil management.
- Suitable for countertop installation.

Construction

- Interior of well with rounded corners for ease of cleaning.
- All exterior panels in Stainless Steel with Scotch Brite finishing.
- One piece pressed 1.5 mm work top in Stainless steel.
- Model has right-angled side edges to allow flush fitting joints between units, eliminating gaps and possible dirt traps.

Sustainability

- This model is compliant with Swiss Energy Efficiency Ordinance (730.02).

Included Accessories

- 2 of Basket for 7lt top and free PNC 921608 standing fryers

Optional Accessories

• Junction sealing kit	PNC 206086 ❑
• Support for bridge type installation, 800mm	PNC 206137 ❑
• Support for bridge type installation, 1000mm	PNC 206138 ❑
• Support for bridge type installation, 1200mm	PNC 206139 ❑
• Support for bridge type installation, 1400mm	PNC 206140 ❑
• Support for bridge type installation, 1600mm	PNC 206141 ❑
• Chimney upstand, 800mm	PNC 206304 ❑
• Right and left side handrails	PNC 206307 ❑
• Back handrail 800 mm	PNC 206308 ❑

• 2 drawers for open base cupboards, 100mm height	PNC 206318	❑
• Chimney grid net, 400mm (700XP/900)	PNC 206400	❑
• 2 side covering panels for top appliances	PNC 216277	❑
• Basket for 7lt top and free standing fryers	PNC 921608	❑

The company reserves the right to make modifications to the products without prior notice. All information correct at time of printing.

Modular Cooking Range Line
700XP Two Wells Electric Fryer Top
7 liter

Front

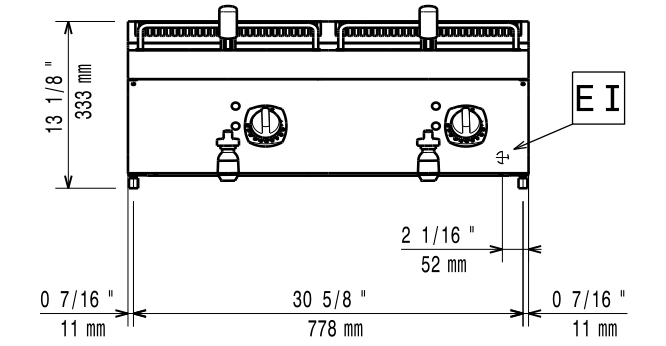

Side

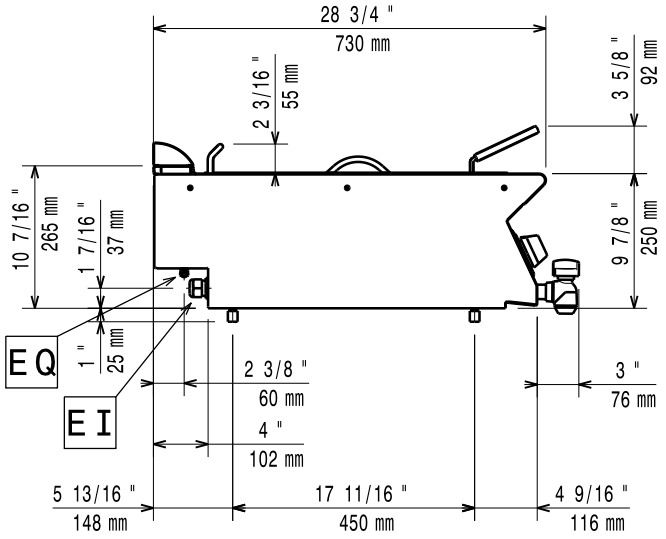

EI = Electrical inlet (power)
EQ = Equipotential screw

Top

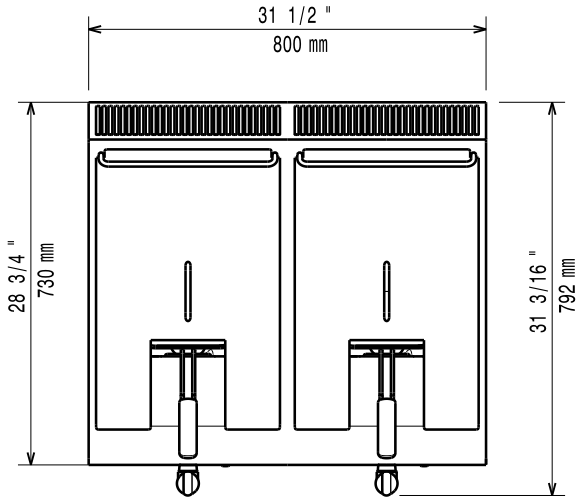

Electric

Supply voltage:	380-400 V/3N ph/50-60 Hz
Total Watts:	10.8 kW

Key Information:

If appliance is set up or next to or against temperature sensitive furniture or similar, a safety gap of approximately 150 mm should be maintained or some form of heat insulation fitted.

Usable well dimensions (width):	240 mm
Usable well dimensions (height):	235 mm
Usable well dimensions (depth):	380 mm
Well capacity:	5.5 lt MIN; 7 lt MAX
Thermostat Range:	105 °C MIN; 185 °C MAX
Net weight:	40.5 kg
Shipping weight:	50 kg
Shipping height:	520 mm
Shipping width:	820 mm
Shipping depth:	860 mm
Shipping volume:	0.37 m³
[NOT TRANSLATED]	EFE72M07

The company reserves the right to make modifications to the products without prior notice. All information correct at time of printing.

2026.11.20